Technical data sheet: NEMO hydronic terminal – DC Inverter

Datasheet: XSCT00148 rev.06- Date 04/11/2025
Family: Hydronic terminals

Description



NEMO is the 12-cm-thick hydronic terminal with a high-efficiency heat exchanger, tangential fan unit with DC Inverter motor, featuring an extremely quiet operation.
The stand-alone on-board digital control system has capacitive touch buttons and see-through display. It can be controlled by on-board hand control, remote control, wall-mounted 0-10V programmer thermostat or via Wi-Fi.
The supporting structure and shell are made of white powder-coated steel. Aluminum air outlet flaps, with manually adjustable opening.
It is complete with condensate collection tank for vertical and horizontal installation, and removable fine-weave air filter. Left side connections ¾"M

Each unit is equipped with:

Brushless modulating permanent magnet fans with inverters, for continuous use, energy-saving with low noise levels.

Cross-flow tangential fan with asymmetric blades, the quietest technology on the market

Electronic control in modulation of the fan speed to continuously adapt the thermal power to the needs of the room.

The "RADIANTor" technology conveys heat or cooling with minimal or no air movements, resulting in an unparalleled acoustic performance.

Advanced control options, with the possibility of external control with 0-10 V signal, with remote control or with integration into 0-10 V home automation systems.

Ideal Clima S.r.l -Brescia
Tel: +39.030.3545319
Fax: +39.030.5109329
www.idealclima.eu
***
Ideal Clima is a trademark of Ideal Clima Srl - all rights reserved.

The following functions are available:

- **Super-silence mode**, for high thermal emission and extremely high levels of silence.
- **"Radiantore" technology** in heating and cooling, for gentle thermal emission with minimal air movement.
- Dehumidification only or ventilation only operation.
- Four levels of fan speed (Maximum, minimum, medium, super-silence, automatic speed)
- Continuous modulation control algorithm selectable between PID or proportional only
- Anti-draft and anti-hot air function with adjustable temperature threshold.
- Compliant with European directives. All units have CE marking and corresponding certificate of conformity.

Field of use

NEMO is designed to:

- Heat, cool and dehumidify.
- Emit power with high efficiency at high as well as low supply temperatures (excellent for heat pump systems).
- Allowing a traditional radiator system to be transformed into a hot/cold air conditioning system (especially when a heat pump is fitted).
- It combines with both traditional boilers, as well as condensing boilers, solar systems and heat pumps.
- It can also be installed in the quietest rooms (bedrooms, residential environments in general), thanks to the acoustic performance of the DC Inverter motor combined with the tangential fan and RADIANTone technology.
- Be combined with modulating 0-10 V thermostats, such as Vision+, or with external 0-10 V controllers in thermodynamics, such as Integra Control Zone.

It is possible to connect NEMO to the hydraulic system using the connection kits with two or three-way valves with a by-pass.
NEMO hydronic terminals can be installed either vertically or horizontally on the ceiling.

Operation modes

Winter operation

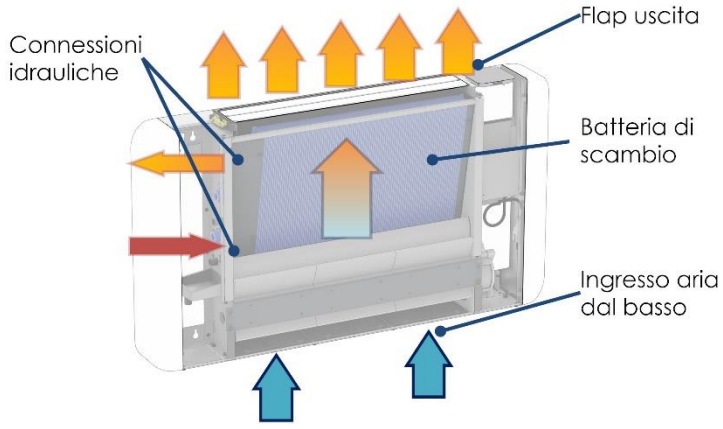

In winter, the unit draws in cold air from below and filters it through the heat exchange coil. The hea exchanger transfers heat from the hydraulic circuit to the air, heating it. The heated air is supplied into the room through the upper flaps which allow you to adjust the direction of the air jet.
An asymmetric tangential fan coupled with a DC Inverter motor ensures absolutely silent airflow.

Ideal Clima S.r.l -Brescia
Tel: +39.030.3545319
Fax: +39.030.5109329
www.idealclima.eu
***
Ideal Clima is a trademark of Ideal Clima Srl - all rights reserved.

Summer operation

the unit draws in hot air from below and conveys it through the heat exchange coil. The coil transfers the heat from the air and transfers it to the hydraulic circuit, cooling it. The cooled air is introduced into the environment through the upper flaps, which allow you to adjust the direction of the air jet. An asymmetrical tangential fan coupled with a DC Inverter motor ensures absolutely silent airflow,

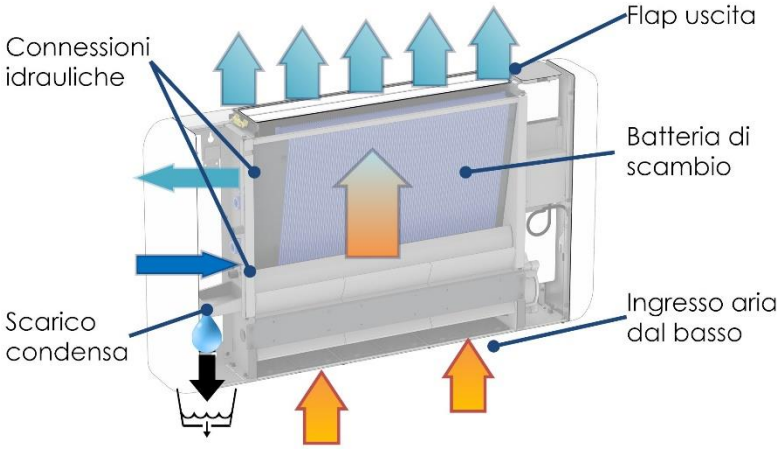

Condensate formed by the dehumidification process is collected in a basin and conveyed to the condensate drain.



Radiantor Technology

Due to the effect of the exchange coil and the passive plate coupled to it, the unit emits heat when needed in the quietest manner.

Air profiles with patented Tripod technology

Thanks to the new "Tripod" technology, patented by Ideal Clima, Nemo operates in the quietest operation with air inlet exclusively from below.

This allows for a clean and elegant appearance with a depth of only 120 mm and absolutely silent operation.

MODE OF CONTROL

The unit can be controlled in the following ways:

- on-board control
- remote control (cod. TQCT05 - optional)
- programmable chronothermostats or home automation that can provide a 0-10V signal
- "Integra Benessere" control system from Ideal Clima, with "Integra Control Zone" in between
- remotely via APP, with the addition of the Wifi+ stick.

Ideal Clima S.r.l -Brescia
Tel: +39.030.3545319
Fax: +39.030.5109329
www.idealclima.eu

***

Ideal Clima is a trademark of Ideal Clima Srl - all rights reserved.

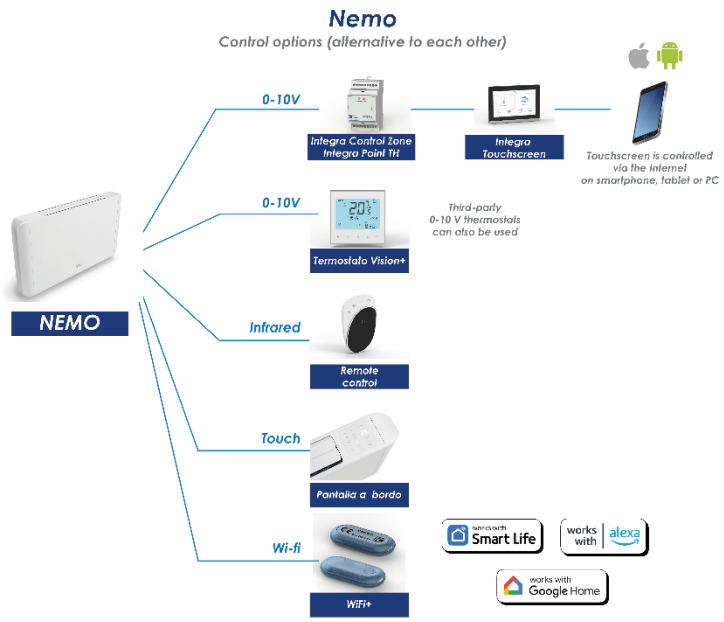

Design

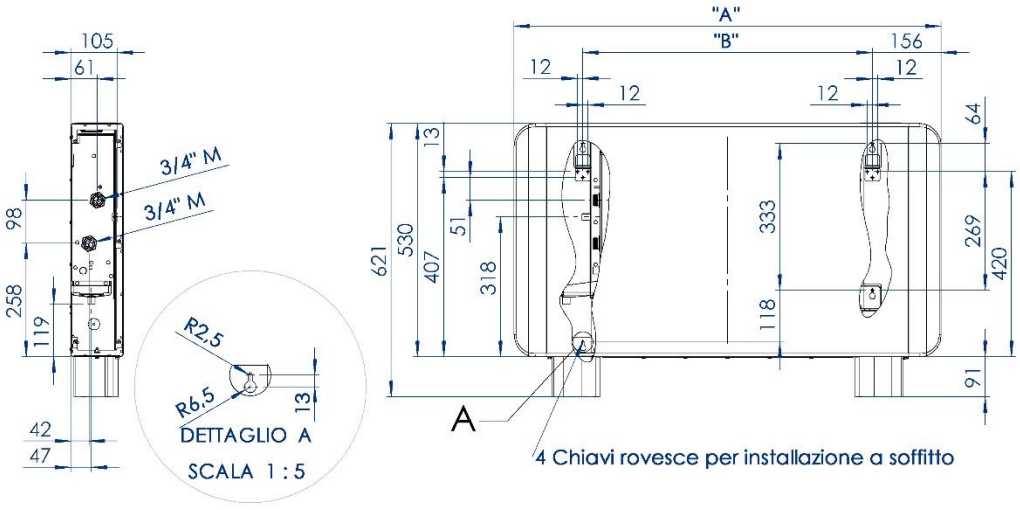

CODE	DESCRIPTION	A [mm]	B. [mm]
TNM02D	NEMO 250	780	468
TNM04D	NEMO 400	970	658
TNM06D	NEMO 600	1'160	848
TNM08D	NEMO 800	1.350	1.038
TNM10D	NEMO 1000	1.350	1.038

All measurements are in mm

Ideal Clima S.r.l -Brescia
Tel: +39.030.3545319
Fax: +39.030.5109329
www.idealclima.eu
***
Ideal Clima is a trademark of Ideal Clima Srl - all rights reserved.

Technical data.

Description		Nemo 250			Nemo 400			Nemo 600		
Code		**TNM02D**			**TNM04D**			**TNM06D**		
		H	**M**	**L**	**H**	**M**	**L**	**H**	**M**	**L**
Heating power T=70-60 °C (1)	**W**	**2'260**	**1765**	**1446**	**3'860**	**3295**	**2683**	**5'370**	**4525**	**3694**
Water flow rate	l/min	3,0	3,0	3,0	6,0	6,0	6,0	8,0	8,0	8,0
Pressure drop	kPa	2,57	2,57	2,57	9,93	9,93	9,93	4,68	4,68	4,68
Heating power T=50-45 °C (2)	**W**	**1'400**	**1059**	**867**	**2'340**	**1977**	**1610**	**3'330**	**2715**	**2216**
Water flow rate	l/min	4,0	4,0	4,0	6,7	6,7	6,7	9.5	9.5	9.5
Pressure drop	kPa	3,9	3,9	3,9	13,9	13,9	13,9	6.9	6.9	6.9
Heating power mod. "Radiantore" (2)	W	450			750			1.090		
Heating power T=45-40 °C (3) (P_H)	**W**	**1'120**	**882**	**723**	**1'920**	**1648**	**1341**	**2'700**	**2262**	**1847**
Water flow rate	l/min	3.2	3.2	3.2	5.5	5.5	5.5	7,7	7,7	7,7
Pressure drop	kPa	2.8	2.8	2.8	8,4	8,4	8,4	5,4	5,4	5,4
Total power cool. T=7-12 °C (4) **(P_C)**	**W**	**815**	**787**	**669**	**1'700**	**1424**	**1005**	**2'515**	**1920**	**1549**
Water flow rate	l/min	2.34	2.34	2.34	4,87	4,87	4,87	7,21	7,21	7,21
Pressure drop	kPa	1.5	1.5	1.5	8,02	8,02	8,02	4,2	4,2	4,2
Air flow rate max speed	mc/h	160			330			460		
Super Silent speed sound pressure (5)	*dB(A)*	*16.6*			*15.2*			*16.2*		
Sound pressure (5)	*dB(A)*	*30.5*	*-*	*18.4*	*36.6*	*-*	*21.1*	*37.0*	*-*	*21.3*
Sound Power ***(Lw)***	*dB(A)*	*44,5*	*-*	*32,4*	*50,6*	*-*	*35,1*	*51*	*-*	*35,3*
Power supply - Degree of protection	V/ph/ Hz	230/1 + N/50------IP23								
Max electrical consumption **(Electric$_{Power}$)**	W	10			13			17		
Water content	L	0,7			1,0			1,3		
Hydraulic connections	inch	¾ M								
Condensate drainage pipe	mm	16								
Maximum working pressure	bar	10								
Maximum operating temperature	°C	80								
Net weight	Kg	18			22			26		
Size	mm	780x621x120			970x621x120			1160x621x120		

Ideal Clima S.r.l -Brescia
Tel: +39.030.3545319
Fax: +39.030.5109329
www.idealclima.eu

***

Ideal Clima is a trademark of Ideal Clima Srl - all rights reserved.

Description		Nemo 800			Nemo 1000		
Code		**TNM08D**			**TNM10D**		
		H	**M**	**L**	**H**	**M**	**L**
Heating power T=70-60 °C (1)	**W**	**6'950**	**5440**	**4440**	**7'920**	**6730**	**5380**
Water flow rate	l/min	10,0	10,0	10,0	11,0	11,0	11,0
Pressure drop	kPa	8,35	8,35	8,35	10,21	10,21	10,21
Heating power T=50-45 °C (2)	**W**	**4'250**	**3260**	**2660**	**4'870**	**4040**	**3230**
Water flow rate	l/min	12,2	12,2	12,2	14,0	14,0	14,0
Pressure drop	kPa	11,8	11,8	11,8	14,8	14,8	14,8
Heating power mod. "Radiantore" (2)	W	1.300			1.620		
Heating power T=45-40 °C (3) (P_H)	**W**	**3'480**	**2720**	**2220**	**3'990**	**3360**	**2690**
Water flow rate	l/min	10,0	10,0	10,0	11,4	11,4	11,4
Pressure drop	kPa	8,4	8,4	8,4	10,7	10,7	10,7
Total power cool. T=7-12 °C (4) **(P_C)**	**W**	**2'922**	**2200**	**1800**	**3'360**	**3016**	**2460**
Water flow rate	l/min	8,38	8,38	8,38	9,63	9,63	9,63
Pressure drop	kPa	6.1	6.1	6.1	7,65	7,65	7,65
Air flow rate max speed	mc/h	590			700		
Super Silent speed sound pressure (5)	*dB(A)*	*18,3*			*21,4*		
Maximum speed sound pressure (5)	*dB(A)*	*40,4*	-	*23,5*	*42,1*	-	*27,0*
Maximum speed sound power ***(Lw)***	*dB(A)*	*53*	-	*37*	*55*	-	*39*
Power supply - Degree of protection	V/ph/ Hz	230/1 + N/50------IP23					
Max electrical consumption **($Electric_{Power}$)**	W	35			60		
Water content	L	1.6			1.6		
Hydraulic connections	inch	¾ M					
Condensate drainage pipe	mm	16					
Maximum working pressure	bar	10					
Maximum operating temperature	°C	80					
Net weight	Kg	30.5			30.5		
Size	mm	1350 x 621x120			1350x621x120		

(1) Temp. Inlet water 70°, Δ T 10°C, Temp. room 20 °C (UNI EN 1397)
(2) Temp. Inlet water 50°, Δ T 5°C Temp. Environment 20 °C (UNI EN 1397)
(3) Temp. Inlet water 45° Δ T 5°C Temp. Environment 20 °C (UNI EN 1397)
(4) Temp. Inlet water 7°, Δ T 5 °C, Temp. Ambient 27 °C - RH 62% (UNI EN 1397)
(5) Sound pressure (dBA) r=2 m Q=2

Ideal Clima S.r.l -Brescia
Tel: +39.030.3545319
Fax: +39.030.5109329
www.idealclima.eu
***
Ideal Clima is a trademark of Ideal Clima Srl - all rights reserved.

Specification items

Cod. TNM02D- Nemo 250 radiator – DC Inverter

Hydronic terminal composed of a copper-aluminium exchange coil with finned pack, galvanized steel frame and powder-coated sheet metal cabinet. With very silent cross-flow tangential fan group. Continuously modulating DC Inverter motor mounted on EPDM anti-vibration supports. Patented technology air profiles and air intake exclusively from below. Air intake with aluminum flaps, manually adjustable. Condensate collection tray for both wall and ceiling mounting. On-board control panel with transparent display and touch buttons, equipped with infrared receiver for remote control and input for 0-10V command. Nominal air flow 160$^{m3/h}$, heating heat capacity 1'120 W with water 45-40°C. cooling capacity of 815 W according to UNI EN 1397, max. power consumption. 10 W. Depth of 120 mm. Connections left side 3/4 " M.

Cod. TNM04D - Nemo 400 radiator – DC Inverter

Hydronic terminal composed of a copper-aluminium exchange coil with finned pack, galvanized steel frame and powder-coated sheet metal cabinet. With very silent cross-flow tangential fan group. Continuously modulating DC Inverter motor mounted on EPDM anti-vibration supports. Patented technology air profiles and air intake exclusively from below. Air intake with aluminum flaps, manually adjustable. Condensate collection tray for both wall and ceiling mounting. On-board control panel with transparent display and touch buttons, equipped with infrared receiver for remote control and input for 0-10V command. Nominal air flow rate 330$^{m3/h}$, heating heat capacity 1'920 W with water 45-40°C. Cooling capacity of 1'700 W according to UNI EN 1397, max. power consumption. 16 W. Depth of 120 mm. Connections left side 3/4 " M.

Cod. TNM06D - Nemo 600 radiator – DC Inverter

Hydronic terminal composed of a copper-aluminium exchange coil with finned pack, galvanized steel frame and powder-coated sheet metal cabinet. With very silent cross-flow tangential fan group. Continuously modulating DC Inverter motor mounted on EPDM anti-vibration supports. Patented technology air profiles and air intake exclusively from below. Air intake with aluminum flaps, manually adjustable. Condensate collection tray for both wall and ceiling mounting. On-board control panel with transparent display and touch buttons, equipped with infrared receiver for remote control and input for 0-10V command. Nominal air flow rate 460 m3/h, heating heat capacity 2'700 W with water 45-40°C. cooling capacity of 2'515 W according to EN 1397, max. power consumption. 17 W. Depth of 120 mm. Connections left side 3/4 " M.

Cod. TNM08D - Nemo 800 Radiantore - DC Inverter

Hydronic terminal composed of a copper-aluminium exchange coil with finned pack, galvanized steel frame and powder-coated sheet metal cabinet. With very silent cross-flow tangential fan group. Continuously modulating DC Inverter motor mounted on EPDM anti-vibration supports. Patented technology air profiles and air intake exclusively from below. Air intake with aluminum flaps, manually adjustable. Condensate collection tray for both wall and ceiling mounting. On-board control panel with transparent display and touch buttons, equipped with infrared receiver for remote control and input for 0-10V command. Nominal air flow rate 590 m3/h, heating heat capacity 3'480 W with water 45-40°C. cooling capacity of 2'922 W according to EN 1397, max. power consumption. 35 W. Depth of 120 mm. Connections left side 3/4 " M.

Cod. TNM10D - Nemo 1000 Radiantore - DC Inverter

Hydronic terminal composed of a copper-aluminium exchange coil with finned pack, galvanized steel frame and powder-coated sheet metal cabinet. With very silent cross-flow tangential fan group. Continuously modulating DC Inverter motor mounted on EPDM anti-vibration supports. Patented

Ideal Clima S.r.l -Brescia
Tel: +39.030.3545319
Fax: +39.030.5109329
www.idealclima.eu
***
Ideal Clima is a trademark of Ideal Clima Srl - all rights reserved.

technology air profiles and air intake exclusively from below. Air intake with aluminum flaps, manually adjustable. Condensate collection tray for both wall and ceiling mounting. On-board control panel with transparent display and touch buttons, equipped with infrared receiver for remote control and input for 0-10V command. Nominal air flow rate 700 m3/h, heating heat capacity 3'990 W with water 45-40°C. 3'360 W cooling capacity according to UNI EN 1397, max. power consumption. 60 W. Depth of 120 mm. Connections left side 3/4 " M.

Notes and installation diagrams / Graphics

Water side pressure drop diagram

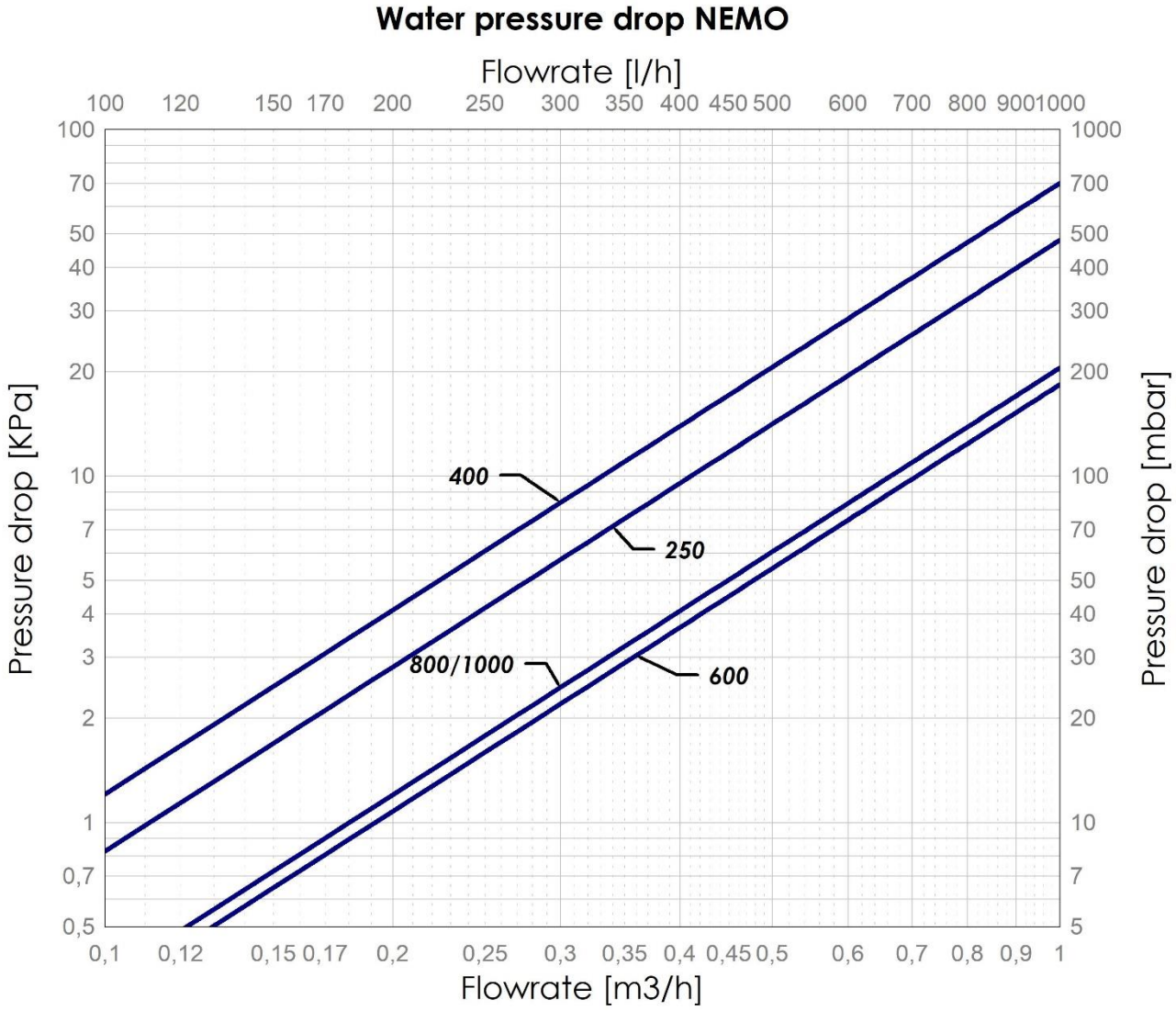

Ideal Clima S.r.l -Brescia
Tel: +39.030.3545319
Fax: +39.030.5109329
www.idealclima.eu
***
Ideal Clima is a trademark of Ideal Clima Srl - all rights reserved.

Pressure drop diagram Hydraulic kits

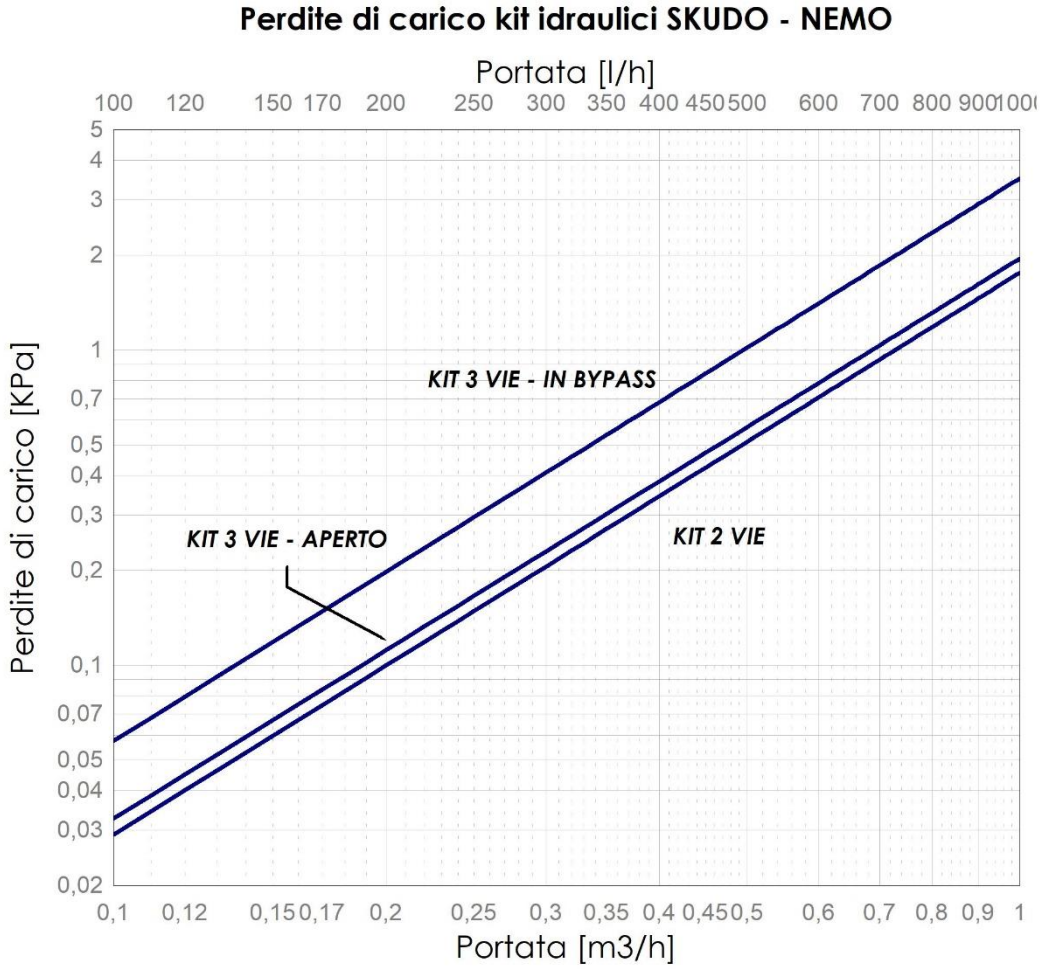

Ideal Clima S.r.l. reserves the right to make changes to the information and technical data contained in this sheet at any time and even without prior notice.

RADIANTORE is a registered trademark of Ideal Clima.

Ideal Clima S.r.l -Brescia
Tel: +39.030.3545319
Fax: +39.030.5109329
www.idealclima.eu

***

Ideal Clima is a trademark of Ideal Clima Srl - all rights reserved.