# TECHNICAL DATA SHEET
# COMFOSPLIT IKARO WHITE/BLACK INVERTER

Board Code: XSCT00159 Rev00 - Date 01/04/2026

Family: Hydronic Terminals

## DESCRIPTION



The Comfosplit IKARO White/Black Inverter hydronic terminal, for wall installation, is designed to provide high quietness qualities, ideal in residential environments.
Thanks to its elegant aesthetics, thickness of only 20 cm, and high-efficiency exchange coil, it can be installed in any environment, both living and sleeping areas.
The highly quiet cross-flow tangential fan is controlled, in continuous modulation Inverter, by a PID algorithm.
The shroud, with a transparent LCD display, encloses the condensate collection tray and removable fine-weave air filters.
The hydraulic connections are 1/2" M.
It accepts a 0-10V signal input for speed management, and has a Modbus card, as well as infrared remote control as standard.

# Field of use

The IKARO White/Black Inverter series is designed to:
Heating, cooling and dehumidifying rooms, with important quiet features for residential.
Emit power with high efficiency at high as well as low flow temperatures (excellent for heat pump systems).
Combine with both conventional and condensing boilers, solar systems and heat pumps.
With the combination of PID modulating control technology, the latest generation cross-flow tangential fan, and the INVERTER module, it is able to achieve room comfort with industry-leading quietness.
IKARO White/Black Inverter can detect room temperature using the on-board probe.
IKARO White/Black Inverter is equipped with an anti-spiff function in winter (ventilation is inhibited with water temperature below 30°C) and an anti-hot air function in summer (ventilation is inhibited with water temperature above 24°C). This function is disabled when IKARO White/Black Inverter is controlled by thermostat acting directly on the 0-10V input.



Heats



Cools




Quiet




Fan
Tangential




Modulating PID

Ikaro can be controlled, alternately:

- From the standard infrared remote control
- Programmable chronothermostats or home automation capable of providing a 0-10V signal

Ideal Clima is a Trade Mark of Ideal Clima Srl - All rights reserved
Ideal Clima is a Trade Mark of Ideal Clima Srl - All rights reserved

- Within a home automation network in Modbus RTU, e.g., from Integra Touchscreen within Ideal Clima's Integra Wellness thermodomotica system.
- Via Wi-Fi with the addition of the TQCT07 Wifi Stick+ accessory (optional).

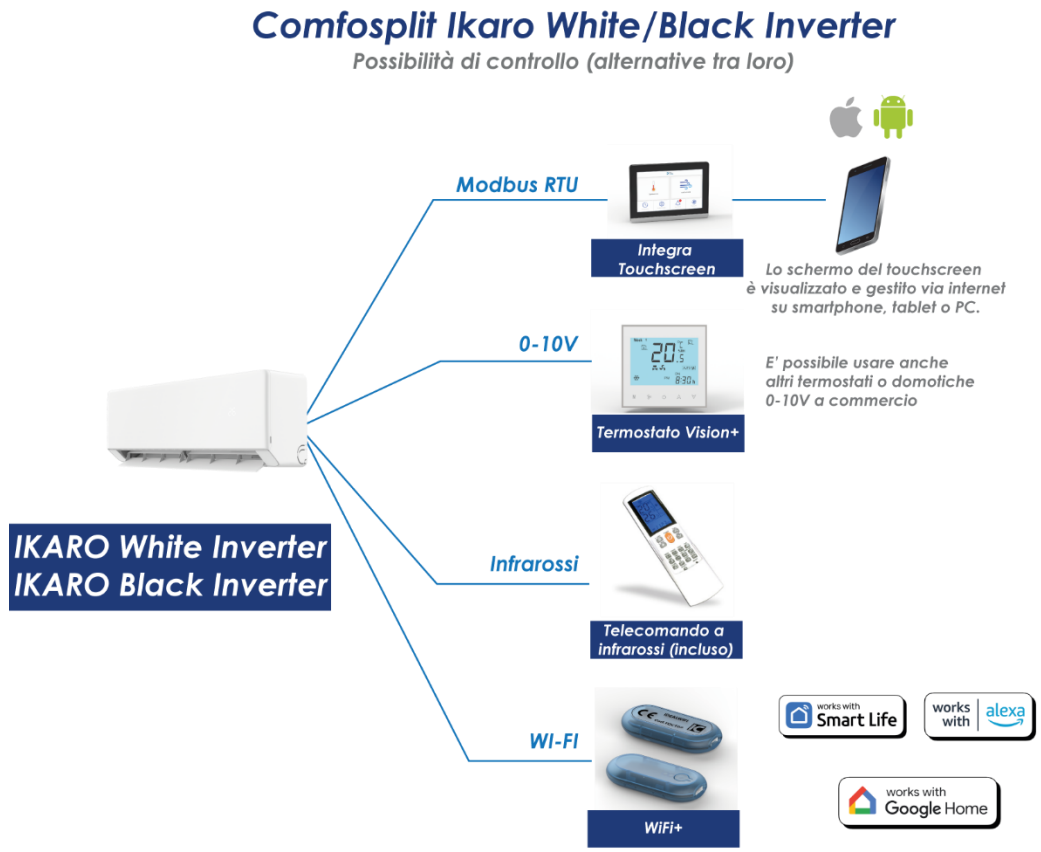


# Technical drawing (dimensions in mm)

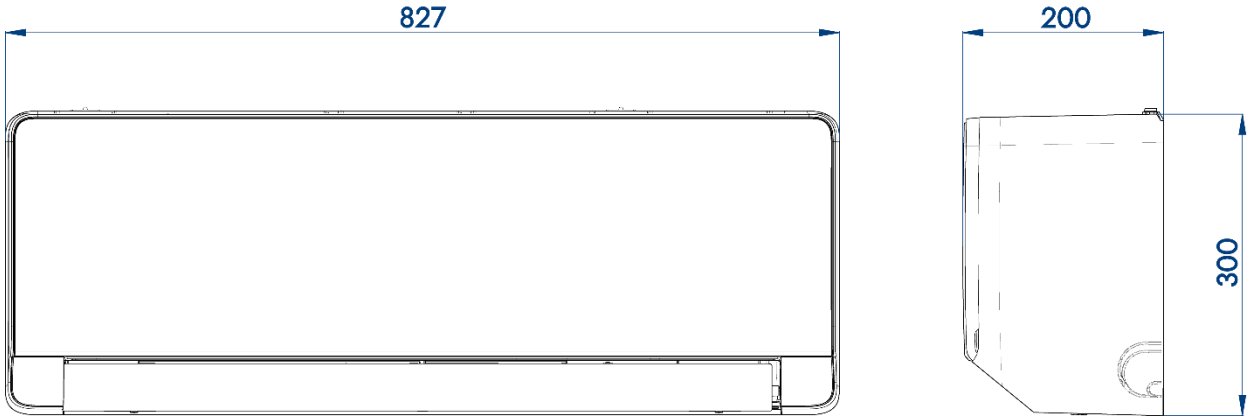


# Technical data

Ideal Clima is a Trade Mark of Ideal Clima Srl - All rights reserved
Ideal Clima is a Trade Mark of Ideal Clima Srl - All rights reserved

| DESCRIPTION | MU. | IKARO WHITE/BLACK 180 INVERTER | IKARO WHITE/BLACK 250 INVERTER | IKARO WHITE/BLACK 350 INVERTER | IKARO WHITE/BLACK 500 INVERTER | IKARO WHITE/BLACK 750 INVERTER |
|---|---|---|---|---|---|---|
| **WHITE VERSION CODE** | | THEL01W | THEL02W | THEL03W | THEL05W | THEL07W |
| **BLACK VERSION CODE** | | THEN01W | THEN02W | THEN03W | THEN05W | THEN07W |
| **Total cooling capacity 7°C (1)** | **W** | **1'112** | **1'303** | **1'689** | **2'570** | **3'330** |
| Sensible cooling power | W | 890 | 1'072 | 1'351 | 2'107 | 2'720 |
| Water flow rate | l/min | 3,17 | 3,75 | 4,83 | 7,92 | 9,67 |
| Pressure drop only Ikaro White / Black | kPa | 5,25 | 6,9 | 11 | 27 | 39 |
| Pressure drop valve 2 and 3-way KVs=1.7 | kPa | 1,4 | 2 | 3,2 | 8,7 | 13,0 |
| **Heating power 45 °C (2)** | **W** | **1'308** | **1'629** | **2'069** | **3'260** | **4'229** |
| Water flow rate | l/min | 3,7 | 4,7 | 5,9 | 9,3 | 12,1 |
| Pressure drop Ikaro White / Black | kPa | 6,1 | 9,1 | 14,4 | 37,6 | 57,4 |
| Pressure drop 3-way valve KVs=1.7 | kPa | 1,9 | 3,1 | 4,8 | 12,0 | 20,3 |
| **Air Flowrate max speed** | **mc/h** | **180** | **250** | **340** | **520** | **730** |
| Sound pressure speed Max. (*) | dB (A) | 13 | 16 | 21 | 27 | 42 |
| Sound pressure speed Med. (*) | dB (A) | 11 | 13 | 18 | 25 | 39 |
| Sound pressure speed Min. (*) | dB (A) | 11 | 12 | 16 | 23 | 37 |
| Power supply-protection grade. | V/ph/Hz | 230/1+N/50—IP23 | | | | |
| Max electrical consumption speed | W | 12,6 | 15,0 | 18,3 | 28,0 | 42,0 |
| Maximum current | A | 0,14 | 0,15 | 0,16 | 0,20 | 0,22 |
| Hydraulic connections | inch | Rc ½" | | | | |
| Actuator output | | 230V - Max 60mA resistive (15W) | | | | |
| Water content | Liters | 1,2 | | | | |
| Condensate drainage pipe | mm | DN 15 | | | | |
| Maximum operating temperature | °C | 70 | | | | |
| Maximum working pressure | MPa | 1,6 | | | | |
| Net weight | Kg | 8,8 | | | | |

(1) Temp. Inlet water 7°, Δ T 5 °C, Temp. Room 27 °C RH 47% (UNI EN 1397 :2015)
(2) Temp. Inlet water 45°, Δ T 5 °C Temp. Environment 20 °C (UNI EN 1397:2015)
(*) Sound pressure (dBA) r=1.5m, Q=1 (UNI EN ISO 3741:2010)

Ideal Clima is a Trade Mark of Ideal Clima Srl - All rights reserved
Ideal Clima is a Trade Mark of Ideal Clima Srl - All rights reserved

# Specification item

### Comfosplit Ikaro White 180 Inverter (THEL01W)

Hydronic terminal with Inverter PID technology for wall mounting, consisting of high-efficiency copper-aluminum exchange coil with mandrel finned pack, galvanized steel frame internally coated with sound-absorbing material. With very silent cross-flow tangential fan group. Continuously modulating AC Inverter motor mounted on EPDM anti-vibration supports.
Complete with condensate collection tank and thin-weave synthetic removable filters. Nominal air flow 180 m3/h, heat output in cooling 1'112 W, in heating 1'308 W. Depth of 200 mm, Sound pressure less than 13 dB(A).
Hydraulic connections 1/2" M.
Controls: infrared remote control, 0-10V variable control and Modbus RTU serial protocol.
Transparent LCD display on board with temperature or setpoint indication. PID flow rate modulation control logic.

### Comfosplit Ikaro Black 180 Inverter (THEN01W)

Hydronic terminal with Inverter PID technology for wall mounting, consisting of high-efficiency copper-aluminum exchange coil with mandrel finned pack, galvanized steel frame internally coated with sound-absorbing material. With very silent cross-flow tangential fan group. Continuously modulating AC Inverter motor mounted on EPDM anti-vibration supports.
Complete with condensate collection tank and thin-weave synthetic removable filters. Nominal air flow 180 m3/h, heat output in cooling 1'112 W, in heating 1'308 W. Depth of 200 mm, Sound pressure less than 13 dB(A).
Hydraulic connections 1/2" M.
Controls: infrared remote control, 0-10V variable control and Modbus RTU serial protocol.
Transparent LCD display on board with temperature or setpoint indication. PID flow rate modulation control logic.

### Comfosplit Ikaro White 250 Inverter (THEL02W).

Hydronic terminal with Inverter PID technology for wall mounting, consisting of high-efficiency copper-aluminum exchange coil with mandrel finned pack, galvanized steel frame internally coated with sound-absorbing material. With very silent cross-flow tangential fan group. Continuously modulating AC Inverter motor mounted on EPDM anti-vibration supports.
Complete with condensate collection tank and thin-weave synthetic removable filters. Nominal air flow 180 m3/h, heat output in cooling 1'303 W, in heating 1'629 W. Depth of 200 mm, Sound pressure less than 16 dB(A).
Hydraulic connections 1/2" M.
Controls: infrared remote control, 0-10V variable control and Modbus RTU serial protocol.
Transparent LCD display on board with temperature or setpoint indication. PID flow rate modulation control logic.

### Comfosplit Ikaro Black 250 Inverter (THEN02W).

Hydronic terminal with Inverter PID technology for wall mounting, consisting of high-efficiency copper-aluminum exchange coil with mandrel finned pack, galvanized steel frame internally coated with sound-absorbing material. With very silent cross-flow tangential fan group. Continuously modulating AC Inverter motor mounted on EPDM anti-vibration supports.
Complete with condensate collection tank and thin-weave synthetic removable filters. Nominal air flow 180 m3/h, heat output in cooling 1'303 W, in heating 1'629 W. Depth of 200 mm, Sound pressure less than 16 dB(A).
Hydraulic connections 1/2" M.

Ideal Clima is a Trade Mark of Ideal Clima Srl - All rights reserved
Ideal Clima is a Trade Mark of Ideal Clima Srl - All rights reserved

Controls: infrared remote control, 0-10V variable control and Modbus RTU serial protocol.
Transparent LCD display on board with temperature or setpoint indication. PID flow rate modulation control logic.

### Comfosplit Ikaro White 350 Inverter (THEL03W).

Hydronic terminal with Inverter PID technology for wall mounting, consisting of high-efficiency copper-aluminum exchange coil with mandrel finned pack, galvanized steel frame internally coated with sound-absorbing material. With very silent cross-flow tangential fan group. Continuously modulating AC Inverter motor mounted on EPDM anti-vibration supports.
Complete with condensate collection tank and thin-weave synthetic removable filters. Nominal air flow 180 m3/h, heat output in cooling 1′689 W, in heating 2′069 W. Depth of 200 mm, Sound pressure less than 21 dB(A). Hydraulic connections 1/2″ M.
Controls: infrared remote control, 0-10V variable control and Modbus RTU serial protocol.
Transparent LCD display on board with temperature or setpoint indication. PID flow rate modulation control logic.

### Comfosplit Ikaro Black 350 Inverter (THEN03W).

Hydronic terminal with Inverter PID technology for wall mounting, consisting of high-efficiency copper-aluminum exchange coil with mandrel finned pack, galvanized steel frame internally coated with sound-absorbing material. With very silent cross-flow tangential fan group. Continuously modulating AC Inverter motor mounted on EPDM anti-vibration supports.
Complete with condensate collection tank and thin-weave synthetic removable filters. Nominal air flow 180 m3/h, heat output in cooling 1′689 W, in heating 2′069 W. Depth of 200 mm, Sound pressure less than 21 dB(A). Hydraulic connections 1/2″ M.
Controls: infrared remote control, 0-10V variable control and Modbus RTU serial protocol.
Transparent LCD display on board with temperature or setpoint indication. PID flow rate modulation control logic.

### Comfosplit Ikaro White 500 Inverter (THEL05W).

Hydronic terminal with Inverter PID technology for wall mounting, consisting of high-efficiency copper-aluminum exchange coil with mandrel finned pack, galvanized steel frame internally coated with sound-absorbing material. With very silent cross-flow tangential fan group. Continuously modulating AC Inverter motor mounted on EPDM anti-vibration supports.
Complete with condensate collection tank and thin-weave synthetic removable filters. Nominal air flow 180 m3/h, heat output in cooling 2′570 W, in heating 3′260 W. Depth of 200 mm, Sound pressure less than 27 dB(A). Hydraulic connections 1/2″ M.
Controls: infrared remote control, 0-10V variable control and Modbus RTU serial protocol.
Transparent LCD display on board with temperature or setpoint indication. PID flow rate modulation control logic.

### Comfosplit Ikaro Black 500 Inverter (THEN05W).

Hydronic terminal with Inverter PID technology for wall mounting, consisting of high-efficiency copper-aluminum exchange coil with mandrel finned pack, galvanized steel frame internally coated with sound-absorbing material. With very silent cross-flow tangential fan group. Continuously modulating AC Inverter motor mounted on EPDM anti-vibration supports.

Ideal Clima is a Trade Mark of Ideal Clima Srl - All rights reserved
Ideal Clima is a Trade Mark of Ideal Clima Srl - All rights reserved

Complete with condensate collection tank and thin-weave synthetic removable filters. Nominal air flow 180 m3/h, heat output in cooling 2'570 W, in heating 3'260 W. Depth of 200 mm, Sound pressure less than 27 dB(A).
Hydraulic connections 1/2" M.
Controls: infrared remote control, 0-10V variable control and Modbus RTU serial protocol.
Transparent LCD display on board with temperature or setpoint indication. PID flow rate modulation control logic.

### Comfosplit Ikaro White 750 Inverter (THEL07W).

Hydronic terminal with Inverter PID technology for wall mounting, consisting of high-efficiency copper-aluminum exchange coil with mandrel finned pack, galvanized steel frame internally coated with sound-absorbing material. With very silent cross-flow tangential fan group. Continuously modulating AC Inverter motor mounted on EPDM anti-vibration supports.
Complete with condensate collection tank and thin-weave synthetic removable filters. Nominal air flow 180 m3/h, heat output in cooling 3'330 W, in heating 4'229 W. Depth of 200 mm, Sound pressure less than 42 dB(A).
Hydraulic connections 1/2" M.
Controls: infrared remote control, 0-10V variable control and Modbus RTU serial protocol.
Transparent LCD display on board with temperature or setpoint indication. PID flow rate modulation control logic.

### Comfosplit Ikaro Black 750 Inverter (THEN07W)

Hydronic terminal with Inverter PID technology for wall mounting, consisting of high-efficiency copper-aluminum exchange coil with mandrel finned pack, galvanized steel frame internally coated with sound-absorbing material. With very silent cross-flow tangential fan group. Continuously modulating AC Inverter motor mounted on EPDM anti-vibration supports.
Complete with condensate collection tank and thin-weave synthetic removable filters. Nominal air flow 180 m3/h, heat output in cooling 3'330 W, in heating 4'229 W. Depth of 200 mm, Sound pressure less than 42 dB(A).
Hydraulic connections 1/2" M.
Controls: infrared remote control, 0-10V variable control and Modbus RTU serial protocol.
Transparent LCD display on board with temperature or setpoint indication. PID flow rate modulation control logic.

Ideal Clima is a Trade Mark of Ideal Clima Srl - All rights reserved
Ideal Clima is a Trade Mark of Ideal Clima Srl - All rights reserved

# Installation diagrams

## Installation measurements

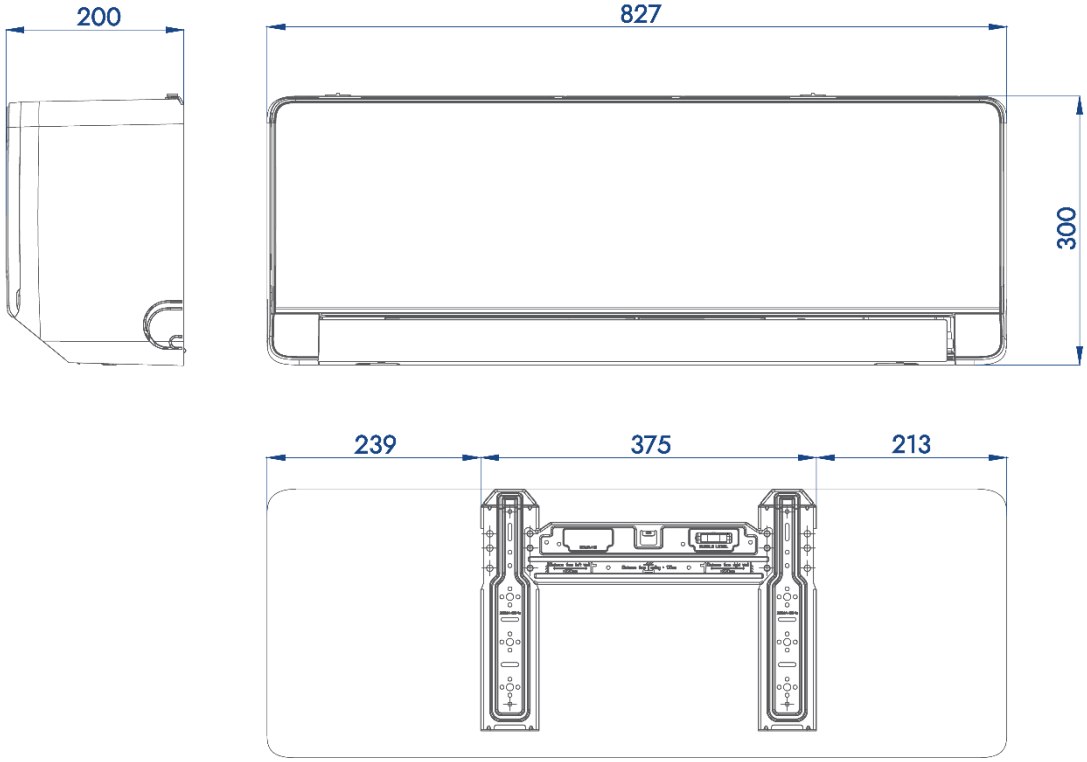


### Direct wall installation

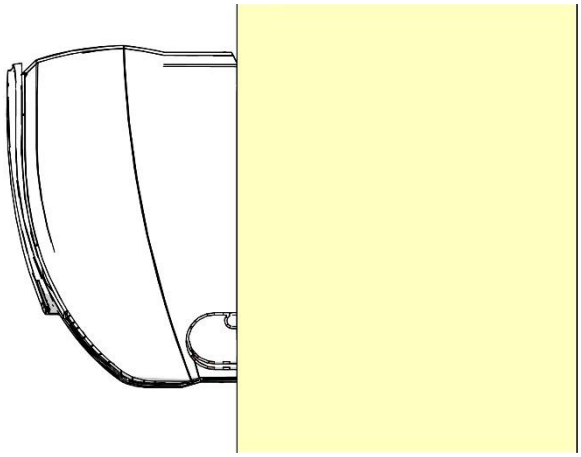

### Installation with predisposition cassette

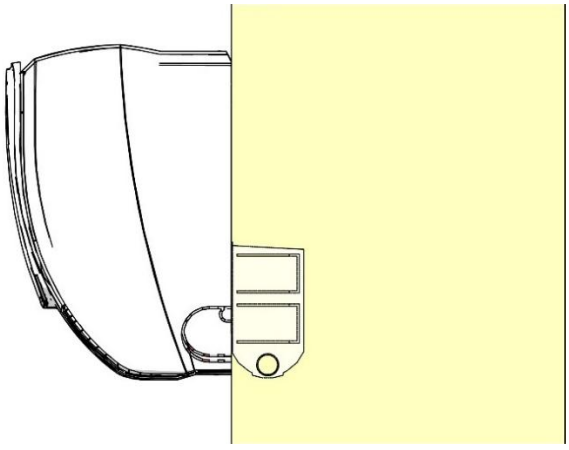

Ikaro can be installed on the wall either directly on the wall or with the use of common flush-mounted air conditioner preparation boxes, with minimum dimensions as shown.

Ideal Clima is a Trade Mark of Ideal Clima Srl - All rights reserved
Ideal Clima is a Trade Mark of Ideal Clima Srl - All rights reserved




To make installation easier, there is the "Enlarged pre-installation box for Ikaro and Falko (code TGCL30). The 2-way kits (code TGCL14) or 3-way (cod. TGCL15) with electrothermal actuator (cos. SLTS04), sold as an accessory.

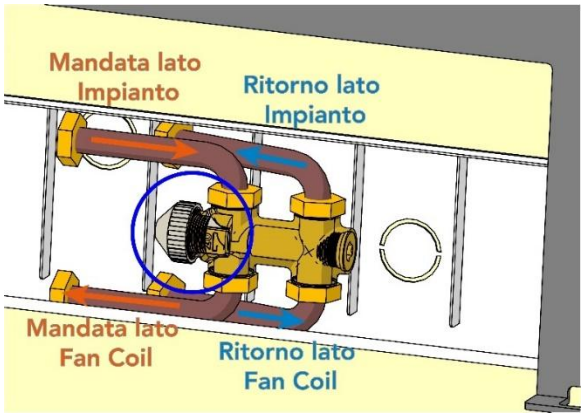


Alternatively, the manifold kits for 2-way hydronic terminals can be used (code TGKSxx) or 3-way (code TGKBxx)

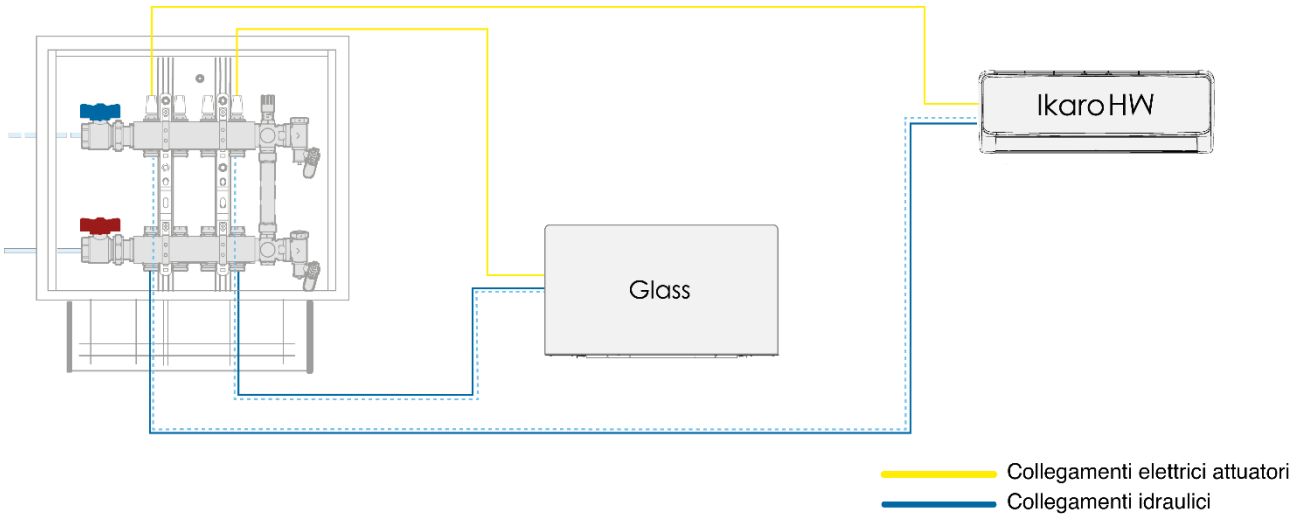


Ideal Clima is a Trade Mark of Ideal Clima Srl - All rights reserved
Ideal Clima is a Trade Mark of Ideal Clima Srl - All rights reserved

## Load losses Comfosplit Ikaro

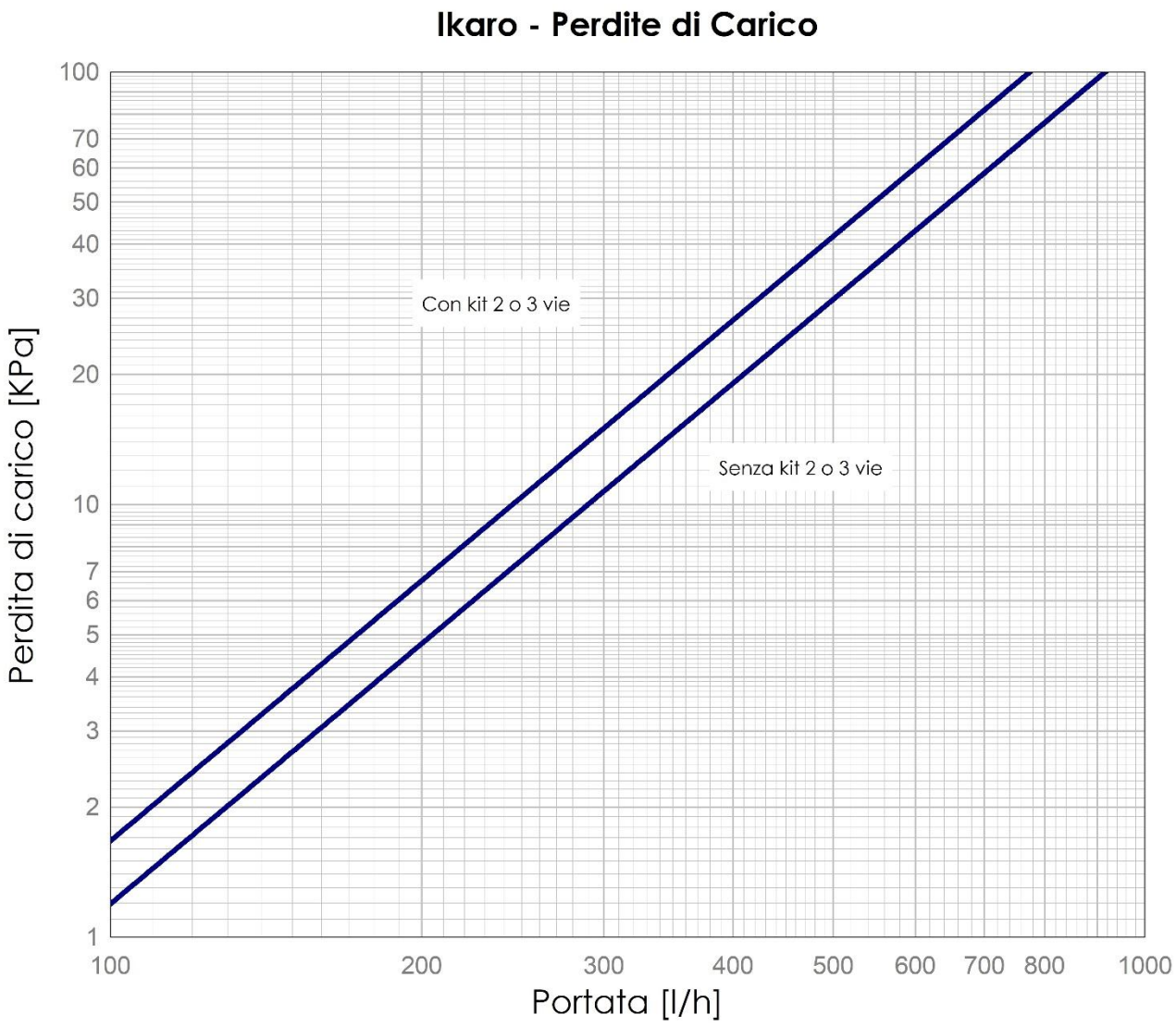


Ideal Clima S.r.l. reserves the right to make changes to the information and technical data contained in this sheet at any time and even without prior notice.

Ideal Clima is a Trade Mark of Ideal Clima Srl - All rights reserved
Ideal Clima is a Trade Mark of Ideal Clima Srl - All rights reserved